Diamond Technology

Orifices & Cutting Heads

www.shmiaoke.com

Miaoke
Wonderful Hard Parts

Replace Flow

Paser ECL | BSF01 03
Paser 4 | BSF02 04
Paser 3 | BSF03/4 5/6
Paser 2 Step | BSF05 07
Standard Mount | BSF06 08
Low Mass | BSF07 09

Replace KMT

Long Stem | BSK01 10
Autoline | BSK02 11

Replace Accustream

DiaLine | BSA01 14
A2 | BSD01 15

Replace Dardi

Old 4-Axis | BSD01 15
New 4-Axis | BSD02 16
SP7 | BSD03 17
SP5 | BSD05 18

Replace OMAX

Maxjet 5 | BSO01 12
GlobalMAX | BSO02 13

Replace Jet Edge & others

Permalign II | BSJ01 19
Same Old | BSY01 20
Same New | BSY02 21

Diamond Cutting Heads

Diamond Guard Filter (SSF) 24
Maxjet 5i | DTO100-A 25
IDE II | DTK100-A 25
IDE III | DTK100-C/D 26
Slice 2 | DTK100-B 27
DiaLine | DTA100-X 28

Miaoke and WHP Waterjet parts are in no way affiliated with Flow®, OMAX®, KMT®, Jet Edge®, Dardi®, Water Jet Sweden®, HyPrecision™, Accustream™, DiaLine™, All other trademarks are the properties of their respective owners. Part numbers are for convenience only.

3est Make WHP Best

Why Customers Choose Us

Highest Performance Ever

- WHP diamond is made with monocrystalline diamond, which is far better than polycrystalline diamond
- The lifetime is usually more than 1,000 hours, which is 30 times more than that of ruby orifices
- 2 times per year or **50+** times per year? A WHP diamond orifice helps to reduce orifice-related downtime
- Reduce the risk of the jet stream misalignment which is casued by frequent orifice replacement

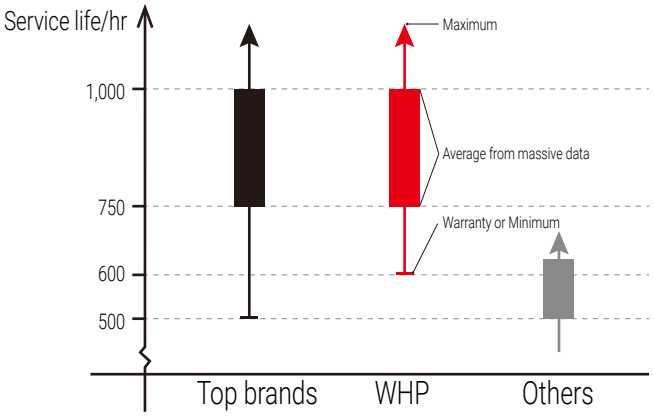

Lowest Operating Cost Ever

We never settle for less! Customers want low cost, but that doesn't mean they need the lowest unit price. When it comes to an orifice, that means customers want low operation cost (cost per hour).

- Save at least 20% on cost per hour with WHP
- The cost per hour of WHP diamond is even lower than ruby and sapphire

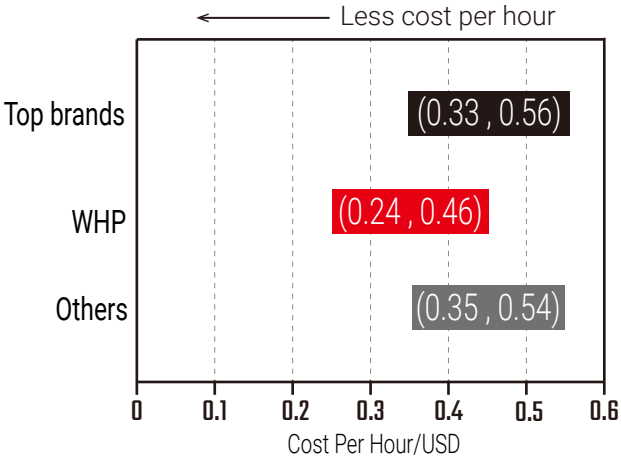

Longest Warranty Ever

- Each of WHP diamond cutting heads guaranteed for at least *600 hours
- -If the actual life of the WHP diamond cutting head does not reach 600 hours, Miaoke will refund the amount according to the percentage of missing time.

  -If the unit fails to work within one week of delivery or 20 hours of proper installation, Miaoke will refund the full amount or replace a new unit.
- Refund method: Order deduction or refund via PayPal

A vendor promises a 600-hour warranty, what do you have to lose?

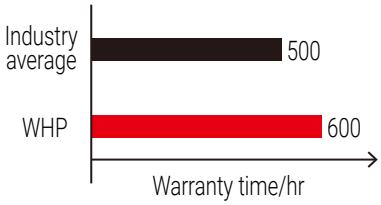

(*600 hours or 4 months from ship date and must be used with Short Stop Filter)

BSF01 BSF01D-xxx Diamond Orifice

Sketch

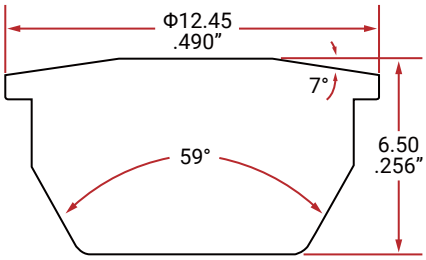

Note

Replace Flow Paser ECL
H2O Jet P-V
Type 26

WHP PART #	ID inch	ID mm	Flow PART #	H2O PART #
BSF01D-010	.004	0.10	014155-4	201940-04
BSF01D-013	.005	0.13	014155-5	201940-05
BSF01D-015	.006	0.15	014155-6	201940-06
BSF01D-018	.007	0.18	014155-7	201940-07
BSF01D-020	.008	0.20	014155-8	201940-08
BSF01D-023	.009	0.23	014155-9	201940-09
BSF01D-025	.010	0.25	014155-10	201940-10
BSF01D-028	.011	0.28	014155-11	201940-11
BSF01D-030	.012	0.30	014155-12	201940-12
BSF01D-033	.013	0.33	014155-13	201940-13
BSF01D-035	.014	0.35	014155-14	201940-14
BSF01D-038	.015	0.38	014155-15	201940-15
BSF01D-041	.016	0.41	014155-16	201940-16
BSF01D-046	.018	0.46	014155-18	201940-18
BSF01D-050	.020	0.50	014155-20	201940-20

BSF01R-Hxxx Ruby Orifice

Picture

WHP PART #	ID inch	ID mm	Flow PART #	H2O PART #
BSF01R-H010	.004	0.10	014201-4	203940-04
BSF01R-H013	.005	0.13	014201-5	203940-05
BSF01R-H015	.006	0.15	014201-6	203940-06
BSF01R-H018	.007	0.18	014201-7	203940-07
BSF01R-H020	.008	0.20	014201-8	203940-08
BSF01R-H023	.009	0.23	014201-9	203940-09
BSF01R-H025	.010	0.25	014201-10	203940-10
BSF01R-H028	.011	0.28	014201-11	203940-11
BSF01R-H030	.012	0.30	014201-12	203940-12
BSF01R-H033	.013	0.33	014201-13	203940-13
BSF01R-H035	.014	0.35	014201-14	203940-14
BSF01R-H038	.015	0.38	014201-15	203940-15
BSF01R-H041	.016	0.41	014201-16	203940-16
BSF01R-H046	.018	0.46	014201-18	203940-18
BSF01R-H050	.020	0.50	014201-20	203940-20

BSF01S-xxx Sapphire Orifice

WHP PART #	ID inch	ID mm	Accustream PART #
BSF01S-010	.004	0.10	1-22498-004
BSF01S-013	.005	0.13	1-22498-005
BSF01S-015	.006	0.15	1-22498-006
BSF01S-018	.007	0.18	1-22498-007
BSF01S-020	.008	0.20	1-22498-008
BSF01S-023	.009	0.23	1-22498-009
BSF01S-025	.010	0.25	1-22498-010
BSF01S-028	.011	0.28	1-22498-011
BSF01S-030	.012	0.30	1-22498-012
BSF01S-033	.013	0.33	1-22498-013
BSF01S-035	.014	0.35	1-22498-014
BSF01S-038	.015	0.38	1-22498-015
BSF01S-041	.016	0.41	1-22498-016
BSF01S-046	.018	0.46	1-22498-018
BSF01S-050	.020	0.50	1-22498-020

WHP Waterjet Orifices

Diamond, Ruby & Sapphire

BSF02 BSF02D-xxx Diamond Orifice

Sketch

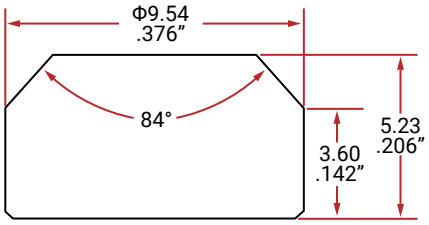

Note

Replace Flow Paser 4
H2O Jet EP P-IV

WHP PART #	ID inch	ID mm	Flow PART #	H2O PART #
BSF02D-010	.004	0.10	015849-4	291502-04
BSF02D-013	.005	0.13	015849-5	291502-05
BSF02D-015	.006	0.15	015849-6	291502-06
BSF02D-018	.007	0.18	015849-7	291502-07
BSF02D-020	.008	0.20	015849-8	291502-08
BSF02D-023	.009	0.23	015849-9	291502-09
BSF02D-025	.010	0.25	015849-10	291502-10
BSF02D-028	.011	0.28	015849-11	291502-11
BSF02D-030	.012	0.30	015849-12	291502-12
BSF02D-033	.013	0.33	015849-13	291502-13
BSF02D-035	.014	0.35	015849-14	291502-14
BSF02D-038	.015	0.38	015849-15	291502-15
BSF02D-041	.016	0.41	015849-16	291502-16
BSF02D-046	.018	0.46	015849-18	291502-18
BSF02D-050	.020	0.50	015849-20	291502-20

BSF02R-Hxxx Ruby Orifice

Picture

WHP PART #	ID inch	ID mm	Flow PART #
BSF02R-H010	.004	0.10	041759-4
BSF02R-H013	.005	0.13	041759-5
BSF02R-H015	.006	0.15	041759-6
BSF02R-H018	.007	0.18	041759-7
BSF02R-H020	.008	0.20	041759-8
BSF02R-H023	.009	0.23	041759-9
BSF02R-H025	.010	0.25	041759-10
BSF02R-H028	.011	0.28	041759-11
BSF02R-H030	.012	0.30	041759-12
BSF02R-H033	.013	0.33	041759-13
BSF02R-H035	.014	0.35	041759-14
BSF02R-H038	.015	0.38	041759-15
BSF02R-H041	.016	0.41	041759-16
BSF02R-H046	.018	0.46	041759-18
BSF02R-H050	.020	0.50	041759-20

BSF02S-xxx Sapphire Orifice

WHP PART #	ID inch	ID mm	Accustream PART #
BSF02S-010	.004	0.10	1-24446-004
BSF02S-013	.005	0.13	1-24446-005
BSF02S-015	.006	0.15	1-24446-006
BSF02S-018	.007	0.18	1-24446-007
BSF02S-020	.008	0.20	1-24446-008
BSF02S-023	.009	0.23	1-24446-009
BSF02S-025	.010	0.25	1-24446-010
BSF02S-028	.011	0.28	1-24446-011
BSF02S-030	.012	0.30	1-24446-012
BSF02S-033	.013	0.33	1-24446-013
BSF02S-035	.014	0.35	1-24446-014
BSF02S-038	.015	0.38	1-24446-015
BSF02S-041	.016	0.41	1-24446-016
BSF02S-046	.018	0.46	1-24446-018
BSF02S-050	.020	0.50	1-24446-020

BSF03 BSF03D-xxx Diamond Orifice

Sketch

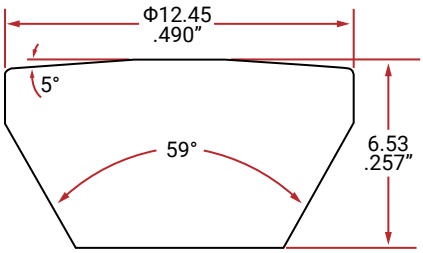

Note

Replace Flow Paser 3, Convex Surface
Resato, Waterjet Italiana
H2O Jet P-III
Type 23/32

WHP PART #	ID inch	ID mm	H2O PART #
BSF03D-010	.004	0.10	201501-04
BSF03D-013	.005	0.13	201501-05
BSF03D-015	.006	0.15	201501-06
BSF03D-018	.007	0.18	201501-07
BSF03D-020	.008	0.20	201501-08
BSF03D-023	.009	0.23	201501-09
BSF03D-025	.010	0.25	201501-10
BSF03D-028	.011	0.28	201501-11
BSF03D-030	.012	0.30	201501-12
BSF03D-033	.013	0.33	201501-13
BSF03D-035	.014	0.35	201501-14
BSF03D-038	.015	0.38	201501-15
BSF03D-041	.016	0.41	201501-16
BSF03D-046	.018	0.46	201501-18
BSF03D-050	.020	0.50	201501-20

BSF03R-Hxxx Ruby Orifice

Picture

WHP PART #	ID inch	ID mm	Flow PART #	H2O PART #
BSF03R-H010	.004	0.10	009519-4; TL-003002-4	203501-04
BSF03R-H013	.005	0.13	009519-5; TL-003002-5	203501-05
BSF03R-H015	.006	0.15	009519-6; TL-003002-6	203501-06
BSF03R-H018	.007	0.18	009519-7; TL-003002-7	203501-07
BSF03R-H020	.008	0.20	009519-8; TL-003002-8	203501-08
BSF03R-H023	.009	0.23	009519-9; TL-003002-9	203501-09
BSF03R-H025	.010	0.25	009519-10; TL-003002-10	203501-10
BSF03R-H028	.011	0.28	009519-11; TL-003002-11	203501-11
BSF03R-H030	.012	0.30	009519-12; TL-003002-12	203501-12
BSF03R-H033	.013	0.33	009519-13; TL-003002-13	203501-13
BSF03R-H035	.014	0.35	009519-14; TL-003002-14	203501-14
BSF03R-H038	.015	0.38	009519-15; TL-003002-15	203501-15
BSF03R-H041	.016	0.41	009519-16; TL-003002-16	203501-16
BSF03R-H046	.018	0.46	009519-18; TL-003002-18	203501-18
BSF03R-H050	.020	0.50	009519-20; TL-003002-20	203501-20

BSF03S-xxx Sapphire Orifice

WHP PART #	ID inch	ID mm	Accustream PART #
BSF03S-010	.004	0.10	1-21226-004
BSF03S-013	.005	0.13	1-21226-005
BSF03S-015	.006	0.15	1-21226-006
BSF03S-018	.007	0.18	1-21226-007
BSF03S-020	.008	0.20	1-21226-008
BSF03S-023	.009	0.23	1-21226-009
BSF03S-025	.010	0.25	1-21226-010
BSF03S-028	.011	0.28	1-21226-011
BSF03S-030	.012	0.30	1-21226-012
BSF03S-033	.013	0.33	1-21226-013
BSF03S-035	.014	0.35	1-21226-014
BSF03S-038	.015	0.38	1-21226-015
BSF03S-041	.016	0.41	1-21226-016
BSF03S-046	.018	0.46	1-21226-018
BSF03S-050	.020	0.50	1-21226-020

WHP Waterjet Orifices

Diamond, Ruby & Sapphire

BSF04 BSF04D-xxx Diamond Orifice

Sketch

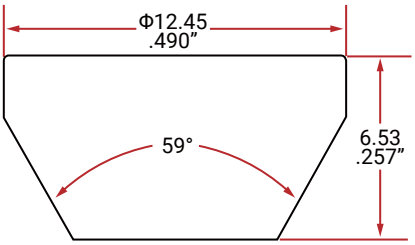

Note

Replace Flow Paser 3, Flat Surface
Resato, Waterjet Italiana
H2O Jet P-III
Type 23/32

WHP PART #	ID inch	ID mm	H2O PART #
BSF04D-010	.004	0.10	201501-04
BSF04D-013	.005	0.13	201501-05
BSF04D-015	.006	0.15	201501-06
BSF04D-018	.007	0.18	201501-07
BSF04D-020	.008	0.20	201501-08
BSF04D-023	.009	0.23	201501-09
BSF04D-025	.010	0.25	201501-10
BSF04D-028	.011	0.28	201501-11
BSF04D-030	.012	0.30	201501-12
BSF04D-033	.013	0.33	201501-13
BSF04D-035	.014	0.35	201501-14
BSF04D-038	.015	0.38	201501-15
BSF04D-041	.016	0.41	201501-16
BSF04D-046	.018	0.46	201501-18
BSF04D-050	.020	0.50	201501-20

BSF04R-Hxxx Ruby Orifice

Picture

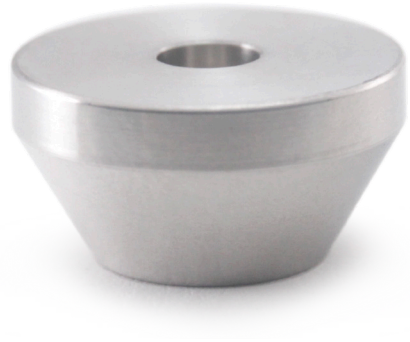

WHP PART #	ID inch	ID mm	Flow PART #	H2O PART #
BSF04R-H010	.004	0.10	009519-4; TL-003002-4	203501-04
BSF04R-H013	.005	0.13	009519-5; TL-003002-5	203501-05
BSF04R-H015	.006	0.15	009519-6; TL-003002-6	203501-06
BSF04R-H018	.007	0.18	009519-7; TL-003002-7	203501-07
BSF04R-H020	.008	0.20	009519-8; TL-003002-8	203501-08
BSF04R-H023	.009	0.23	009519-9; TL-003002-9	203501-09
BSF04R-H025	.010	0.25	009519-10; TL-003002-10	203501-10
BSF04R-H028	.011	0.28	009519-11; TL-003002-11	203501-11
BSF04R-H030	.012	0.30	009519-12; TL-003002-12	203501-12
BSF04R-H033	.013	0.33	009519-13; TL-003002-13	203501-13
BSF04R-H035	.014	0.35	009519-14; TL-003002-14	203501-14
BSF04R-H038	.015	0.38	009519-15; TL-003002-15	203501-15
BSF04R-H041	.016	0.41	009519-16; TL-003002-16	203501-16
BSF04R-H046	.018	0.46	009519-18; TL-003002-18	203501-18
BSF04R-H050	.020	0.50	009519-20; TL-003002-20	203501-20

BSF04S-xxx Sapphire Orifice

WHP PART #	ID inch	ID mm	Accustream PART #
BSF04S-010	.004	0.10	1-21226-004
BSF04S-013	.005	0.13	1-21226-005
BSF04S-015	.006	0.15	1-21226-006
BSF04S-018	.007	0.18	1-21226-007
BSF04S-020	.008	0.20	1-21226-008
BSF04S-023	.009	0.23	1-21226-009
BSF04S-025	.010	0.25	1-21226-010
BSF04S-028	.011	0.28	1-21226-011
BSF04S-030	.012	0.30	1-21226-012
BSF04S-033	.013	0.33	1-21226-013
BSF04S-035	.014	0.35	1-21226-014
BSF04S-038	.015	0.38	1-21226-015
BSF04S-041	.016	0.41	1-21226-016
BSF04S-046	.018	0.46	1-21226-018
BSF04S-050	.020	0.50	1-21226-020

BSF05 BSF05D-xxx Diamond Orifice

Sketch

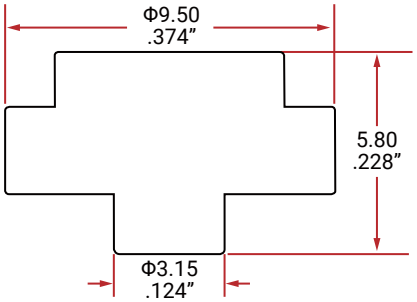

Note

Replace Flow Paser 2 Step Bystronic, H2O Jet P-II Type 14

WHP PART #	ID inch	ID mm	Flow PART #	H2O PART #
BSF05D-010	.004	0.10	D-5070-4	201601-04
BSF05D-013	.005	0.13	D-5070-5	201601-05
BSF05D-015	.006	0.15	D-5070-6	201601-06
BSF05D-018	.007	0.18	D-5070-7	201601-07
BSF05D-020	.008	0.20	D-5070-8	201601-08
BSF05D-023	.009	0.23	D-5070-9	201601-09
BSF05D-025	.010	0.25	D-5070-10	201601-10
BSF05D-028	.011	0.28	D-5070-11	201601-11
BSF05D-030	.012	0.30	D-5070-12	201601-12
BSF05D-033	.013	0.33	D-5070-13	201601-13
BSF05D-035	.014	0.35	D-5070-14	201601-14
BSF05D-038	.015	0.38	D-5070-15	201601-15
BSF05D-041	.016	0.41	D-5070-16	201601-16
BSF05D-046	.018	0.46	D-5070-18	201601-18
BSF05D-050	.020	0.50	D-5070-20	201601-20

BSF05R-Hxxx Ruby Orifice

Picture

WHP PART #	ID inch	ID mm	H2O PART #	Accustream PART #
BSF05R-H010	.004	0.10	203601-04	1-11398-004
BSF05R-H013	.005	0.13	203601-05	1-11398-005
BSF05R-H015	.006	0.15	203601-06	1-11398-006
BSF05R-H018	.007	0.18	203601-07	1-11398-007
BSF05R-H020	.008	0.20	203601-08	1-11398-008
BSF05R-H023	.009	0.23	203601-09	1-11398-009
BSF05R-H025	.010	0.25	203601-10	1-11398-010
BSF05R-H028	.011	0.28	203601-11	1-11398-011
BSF05R-H030	.012	0.30	203601-12	1-11398-012
BSF05R-H033	.013	0.33	203601-13	1-11398-013
BSF05R-H035	.014	0.35	203601-14	1-11398-014
BSF05R-H038	.015	0.38	203601-15	1-11398-015
BSF05R-H041	.016	0.41	203601-16	1-11398-016
BSF05R-H046	.018	0.46	203601-18	1-11398-018
BSF05R-H050	.020	0.50	203601-20	1-11398-020

BSF05S-xxx Sapphire Orifice

WHP PART #	ID inch	ID mm	Flow PART #	H2O PART #
BSF05S-010	.004	0.10	001821-4	202601-04
BSF05S-013	.005	0.13	001821-5	202601-05
BSF05S-015	.006	0.15	001821-6	202601-06
BSF05S-018	.007	0.18	001821-7	202601-07
BSF05S-020	.008	0.20	001821-8	202601-08
BSF05S-023	.009	0.23	001821-9	202601-09
BSF05S-025	.010	0.25	001821-10	202601-10
BSF05S-028	.011	0.28	001821-11	202601-11
BSF05S-030	.012	0.30	001821-12	202601-12
BSF05S-033	.013	0.33	001821-13	202601-13
BSF05S-035	.014	0.35	001821-14	202601-14
BSF05S-038	.015	0.38	001821-15	202601-15
BSF05S-041	.016	0.41	001821-16	202601-16
BSF05S-046	.018	0.46	001821-18	202601-18
BSF05S-050	.020	0.50	001821-20	202601-20

WHP Waterjet Orifices

Diamond, Ruby & Sapphire

BSF06 BSF06D-xxx Diamond Orifice

Sketch

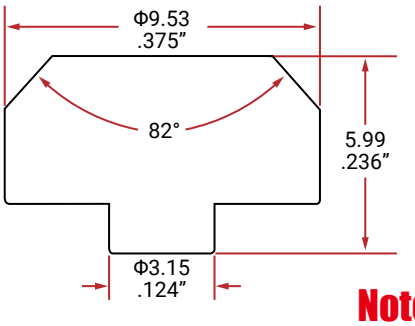

Note

Replace Flow Standard Mount P1 & P2
Allfi, BFT, Bystronic, Trumpf, Tecnocut
H2O Jet Standard Nozzle
Type 18

WHP PART #	ID inch	ID mm	Flow PART #	H2O PART #
BSF06D-010	.004	0.10	D-5071-4; TL-003004-4	201101-04
BSF06D-013	.005	0.13	D-5071-5; TL-003004-5	201101-05
BSF06D-015	.006	0.15	D-5071-6; TL-003004-6	201101-06
BSF06D-018	.007	0.18	D-5071-7; TL-003004-7	201101-07
BSF06D-020	.008	0.20	D-5071-8; TL-003004-8	201101-08
BSF06D-023	.009	0.23	D-5071-9; TL-003004-9	201101-09
BSF06D-025	.010	0.25	D-5071-10; TL-003004-10	201101-10
BSF06D-028	.011	0.28	D-5071-11; TL-003004-11	201101-11
BSF06D-030	.012	0.30	D-5071-12; TL-003004-12	201101-12
BSF06D-033	.013	0.33	D-5071-13; TL-003004-13	201101-13
BSF06D-035	.014	0.35	D-5071-14; TL-003004-14	201101-14
BSF06D-038	.015	0.38	D-5071-15; TL-003004-15	201101-15
BSF06D-041	.016	0.41	D-5071-16; TL-003004-16	201101-16
BSF06D-046	.018	0.46	D-5071-18; TL-003004-18	201101-18
BSF06D-050	.020	0.50	D-5071-20; TL-003004-20	201101-20

BSF01R-Hxxx Ruby Orifice

Picture

WHP PART #	ID inch	ID mm	Accustream PART #
BSF06R-H010	.004	0.10	1-11238-004
BSF06R-H013	.005	0.13	1-11238-005
BSF06R-H015	.006	0.15	1-11238-006
BSF06R-H018	.007	0.18	1-11238-007
BSF06R-H020	.008	0.20	1-11238-008
BSF06R-H023	.009	0.23	1-11238-009
BSF06R-H025	.010	0.25	1-11238-010
BSF06R-H028	.011	0.28	1-11238-011
BSF06R-H030	.012	0.30	1-11238-012
BSF06R-H033	.013	0.33	1-11238-013
BSF06R-H035	.014	0.35	1-11238-014
BSF06R-H038	.015	0.38	1-11238-015
BSF06R-H041	.016	0.41	1-11238-016
BSF06R-H046	.018	0.46	1-11238-018
BSF06R-H050	.020	0.50	1-11238-020

BSF06S-xxx Sapphire Orifice

WHP PART #	ID inch	ID mm	Flow PART #	H2O PART #
BSF06S-010	.004	0.10	004519-4; TL-003001-4	202101-04
BSF06S-013	.005	0.13	004519-5; TL-003001-5	202101-05
BSF06S-015	.006	0.15	004519-6; TL-003001-6	202101-06
BSF06S-018	.007	0.18	004519-7; TL-003001-7	202101-07
BSF06S-020	.008	0.20	004519-8; TL-003001-8	202101-08
BSF06S-023	.009	0.23	004519-9; TL-003001-9	202101-09
BSF06S-025	.010	0.25	004519-10; TL-003001-10	202101-10
BSF06S-028	.011	0.28	004519-11; TL-003001-11	202101-11
BSF06S-030	.012	0.30	004519-12; TL-003001-12	202101-12
BSF06S-033	.013	0.33	004519-13; TL-003001-13	202101-13
BSF06S-035	.014	0.35	004519-14; TL-003001-14	202101-14
BSF06S-038	.015	0.38	004519-15; TL-003001-15	202101-15
BSF06S-041	.016	0.41	004519-16; TL-003001-16	202101-16
BSF06S-046	.018	0.46	004519-18; TL-003001-18	202101-18
BSF06S-050	.020	0.50	004519-20; TL-003001-20	202101-20

BSF07 BSF07D-xxx Diamond Orifice

Sketch

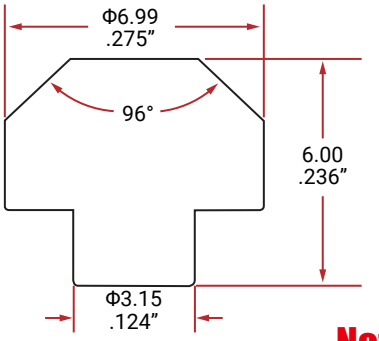

Note

Replace Flow Low Mass/Profile KMT, Ingersoll-Rand, Atom Type 20

WHP PART #	ID inch	ID mm	Accustream PART #
BSF07D-010	.004	0.10	1-11462D-004
BSF07D-013	.005	0.13	1-11462D-005
BSF07D-015	.006	0.15	1-11462D-006
BSF07D-018	.007	0.18	1-11462D-007
BSF07D-020	.008	0.20	1-11462D-008
BSF07D-023	.009	0.23	1-11462D-009
BSF07D-025	.010	0.25	1-11462D-010
BSF07D-028	.011	0.28	1-11462D-011
BSF07D-030	.012	0.30	1-11462D-012
BSF07D-033	.013	0.33	1-11462D-013
BSF07D-035	.014	0.35	1-11462D-014
BSF07D-038	.015	0.38	1-11462D-015
BSF07D-041	.016	0.41	1-11462D-016
BSF07D-046	.018	0.46	1-11462D-018
BSF07D-050	.020	0.50	1-11462D-020

BSF07R-Hxxx Ruby Orifice

Picture

WHP PART #	ID inch	ID mm	Accustream PART #
BSF07R-H010	.004	0.10	1-11462-004
BSF07R-H013	.005	0.13	1-11462-005
BSF07R-H015	.006	0.15	1-11462-006
BSF07R-H018	.007	0.18	1-11462-007
BSF07R-H020	.008	0.20	1-11462-008
BSF07R-H023	.009	0.23	1-11462-009
BSF07R-H025	.010	0.25	1-11462-010
BSF07R-H028	.011	0.28	1-11462-011
BSF07R-H030	.012	0.30	1-11462-012
BSF07R-H033	.013	0.33	1-11462-013
BSF07R-H035	.014	0.35	1-11462-014
BSF07R-H038	.015	0.38	1-11462-015
BSF07R-H041	.016	0.41	1-11462-016
BSF07R-H046	.018	0.46	1-11462-018
BSF07R-H050	.020	0.50	1-11462-020

BSF07S-xxx Sapphire Orifice

WHP PART #	ID inch	ID mm	Flow PART #
BSF07S-010	.004	0.10	003788-4; TL-003003-4
BSF07S-013	.005	0.13	003788-5; TL-003003-5
BSF07S-015	.006	0.15	003788-6; TL-003003-6
BSF07S-018	.007	0.18	003788-7; TL-003003-7
BSF07S-020	.008	0.20	003788-8; TL-003003-8
BSF07S-023	.009	0.23	003788-9; TL-003003-9
BSF07S-025	.010	0.25	003788-10; TL-003003-10
BSF07S-028	.011	0.28	003788-11; TL-003003-11
BSF07S-030	.012	0.30	003788-12; TL-003003-12
BSF07S-033	.013	0.33	003788-13; TL-003003-13
BSF07S-035	.014	0.35	003788-14; TL-003003-14
BSF07S-038	.015	0.38	003788-15; TL-003003-15
BSF07S-041	.016	0.41	003788-16; TL-003003-16
BSF07S-046	.018	0.46	003788-18; TL-003003-18
BSF07S-050	.020	0.50	003788-20; TL-003003-20

WHP Waterjet Orifices

Diamond, Ruby & Sapphire

BSK01 BSK01D-xxx Diamond Orifice

Sketch

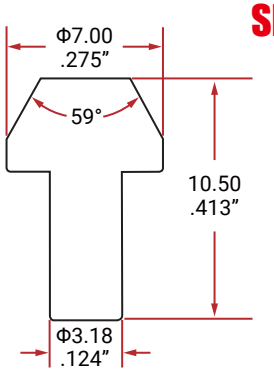

Note

Replace KMT Long Stem
Allfi, Bystronic, Belotti
Digital Control, Ingersoll-Rand
Type 10

WHP PART #	ID inch	ID mm	KMT PART #	H2O PART #
BSK01D-010	.004	0.10	49888860	201401-04
BSK01D-013	.005	0.13	49888878	201401-05
BSK01D-015	.006	0.15	49888886	201401-06
BSK01D-018	.007	0.18	49888894	201401-07
BSK01D-020	.008	0.20	49888902	201401-08
BSK01D-023	.009	0.23	49888910	201401-09
BSK01D-025	.010	0.25	49888928	201401-10
BSK01D-028	.011	0.28	--	201401-11
BSK01D-030	.012	0.30	49888936	201401-12
BSK01D-033	.013	0.33	49836786	201401-13
BSK01D-035	.014	0.35	49888944	201401-14
BSK01D-038	.015	0.38	49888951	201401-15
BSK01D-041	.016	0.41	49888969	201401-16
BSK01D-046	.018	0.46	49888977	201401-18
BSK01D-050	.020	0.50	49888985	201401-20

BSK01R-Hxxx Ruby Orifice

Picture

WHP PART #	ID inch	ID mm	Accustream PART #
BSK01R-H010	.004	0.10	1-13587-004
BSK01R-H013	.005	0.13	1-13587-005
BSK01R-H015	.006	0.15	1-13587-006
BSK01R-H018	.007	0.18	1-13587-007
BSK01R-H020	.008	0.20	1-13587-008
BSK01R-H023	.009	0.23	1-13587-009
BSK01R-H025	.010	0.25	1-13587-010
BSK01R-H028	.011	0.28	1-13587-011
BSK01R-H030	.012	0.30	1-13587-012
BSK01R-H033	.013	0.33	1-13587-013
BSK01R-H035	.014	0.35	1-13587-014
BSK01R-H038	.015	0.38	1-13587-015
BSK01R-H041	.016	0.41	1-13587-016
BSK01R-H046	.018	0.46	1-13587-018
BSK01R-H050	.020	0.50	1-13587-020

BSK01S-xxx Sapphire Orifice

WHP PART #	ID inch	ID mm	KMT PART #	H2O PART #
BSK01S-010	.004	0.10	A2260004, 49863574	202401-04
BSK01S-013	.005	0.13	A2260005, 49863582	202401-05
BSK01S-015	.006	0.15	A2260006, 91954073	202401-06
BSK01S-018	.007	0.18	A2260007, 49863590	202401-07
BSK01S-020	.008	0.20	A2260008, 49865850	202401-08
BSK01S-023	.009	0.23	A2260009, 49863608	202401-09
BSK01S-025	.010	0.25	A2260010, 49863616	202401-10
BSK01S-028	.011	0.28	A2260011	202401-11
BSK01S-030	.012	0.30	A2260012, 49863624	202401-12
BSK01S-033	.013	0.33	A2260013	202401-13
BSK01S-035	.014	0.35	A2260014, 49863632	202401-14
BSK01S-038	.015	0.38	A2260015	202401-15
BSK01S-041	.016	0.41	A2260016	202401-16
BSK01S-046	.018	0.46	A2260018	202401-18
BSK01S-050	.020	0.50	A2260020	202401-20

BSK02 BSK02D-xxx Diamond Orifice

Sketch

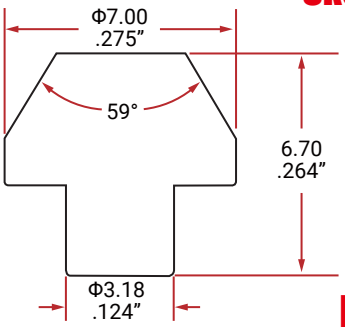

Note

Replace KMT Autoline I&II
Water Jet Sweden (WJS)
Ingersoll-Rand
Type 27

WHP PART #	ID inch	ID mm	KMT PART #	WJS PART #
BSK02D-010	.004	0.10	20448625	--
BSK02D-013	.005	0.13	--	--
BSK02D-015	.006	0.15	--	--
BSK02D-018	.007	0.18	05063847	--
BSK02D-020	.008	0.20	05112537	7800115
BSK02D-023	.009	0.23	05084504	7800116
BSK02D-025	.010	0.25	05077029	--
BSK02D-028	.011	0.28	05101753	--
BSK02D-030	.012	0.30	05077300	7800118
BSK02D-033	.013	0.33	05136098	7800119
BSK02D-035	.014	0.35	05077037	7800120
BSK02D-038	.015	0.38	--	--
BSK02D-041	.016	0.41	05121512	7800121
BSK02D-046	.018	0.46	05114905	7800122
BSK02D-050	.020	0.50	05114897	7800123

BSK02R-Hxxx Ruby Orifice

Picture

WHP PART #	ID inch	ID mm	Accustream PART #
BSK02R-H010	.004	0.10	1-11280-004
BSK02R-H013	.005	0.13	1-11280-005
BSK02R-H015	.006	0.15	1-11280-006
BSK02R-H018	.007	0.18	1-11280-007
BSK02R-H020	.008	0.20	1-11280-008
BSK02R-H023	.009	0.23	1-11280-009
BSK02R-H025	.010	0.25	1-11280-010
BSK02R-H028	.011	0.28	1-11280-011
BSK02R-H030	.012	0.30	1-11280-012
BSK02R-H033	.013	0.33	1-11280-013
BSK02R-H035	.014	0.35	1-11280-014
BSK02R-H038	.015	0.38	1-11280-015
BSK02R-H041	.016	0.41	1-11280-016
BSK02R-H046	.018	0.46	1-11280-018
BSK02R-H050	.020	0.50	1-11280-020

BSK02S-xxx Sapphire Orifice

WHP PART #	ID inch	ID mm	KMT PART #	WJS PART #
BSK02S-010	.004	0.10	05214794	7800003
BSK02S-013	.005	0.13	05222836	7800004
BSK02S-015	.006	0.15	--	7800005
BSK02S-018	.007	0.18	05109079, 80217	7800014
BSK02S-020	.008	0.20	05109087, 80220	7800015
BSK02S-023	.009	0.23	05109095, 80423	7800016
BSK02S-025	.010	0.25	'05109103, 80225	7800017
BSK02S-028	.011	0.28	'05109111, 80227	--
BSK02S-030	.012	0.30	05109129, 80230	7800019
BSK02S-033	.013	0.33	20412569, 80433	7800049
BSK02S-035	.014	0.35	05109137, 80235, 05077037	7800020
BSK02S-038	.015	0.38	--	--
BSK02S-041	.016	0.41	20448541, 80240	7800021
BSK02S-046	.018	0.46	05114913, 80245	7800078
BSK02S-050	.020	0.50	05114921	7800079

WHP Waterjet Orifices

Diamond, Ruby & Sapphire

BSO01 BSO01D-xxx Diamond Orifice

Sketch

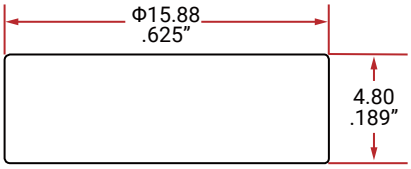

Note

Replace OMAX Maxjet 5i

WHP PART #	ID inch	ID mm	OMAX PART #
BSO01D-010	.004	0.10	305322-04, 303408-04
BSO01D-013	.005	0.13	305322-05, 303408-05
BSO01D-015	.006	0.15	305322-06, 303408-06
BSO01D-018	.007	0.18	305322-07, 303408-07
BSO01D-020	.008	0.20	305322-08, 303408-08
BSO01D-023	.009	0.23	305322-09, 303408-09
BSO01D-025	.010	0.25	305322-10, 303408-10
BSO01D-028	.011	0.28	305322-11, 303408-11
BSO01D-030	.012	0.30	305322-12, 303408-12
BSO01D-033	.013	0.33	305322-13, 303408-13
BSO01D-035	.014	0.35	305322-14, 303408-14
BSO01D-038	.015	0.38	305322-15, 303408-15
BSO01D-041	.016	0.41	305322-16, 303408-16
BSO01D-046	.018	0.46	305322-18, 303408-18
BSO01D-050	.020	0.50	305322-20, 303408-20

BSO01R-Hxxx Ruby Orifice

Picture

WHP PART #	ID inch	ID mm	Accustream PART #
BSO01R-H010	.004	0.10	1-11474-004
BSO01R-H013	.005	0.13	1-11474-005
BSO01R-H015	.006	0.15	1-11474-006
BSO01R-H018	.007	0.18	1-11474-007
BSO01R-H020	.008	0.20	1-11474-008
BSO01R-H023	.009	0.23	1-11474-009
BSO01R-H025	.010	0.25	1-11474-010
BSO01R-H028	.011	0.28	1-11474-011
BSO01R-H030	.012	0.30	1-11474-012
BSO01R-H033	.013	0.33	1-11474-013
BSO01R-H035	.014	0.35	1-11474-014
BSO01R-H038	.015	0.38	1-11474-015
BSO01R-H041	.016	0.41	1-11474-016
BSO01R-H046	.018	0.46	1-11474-018
BSO01R-H050	.020	0.50	1-11474-020

BSO01S-xxx Sapphire Orifice

WHP PART #	ID inch	ID mm	OMAX PART #
BSO01S-010	.004	0.10	303281-04
BSO01S-013	.005	0.13	303281-05
BSO01S-015	.006	0.15	303281-06
BSO01S-018	.007	0.18	303281-07
BSO01S-020	.008	0.20	303281-08
BSO01S-023	.009	0.23	303281-09
BSO01S-025	.010	0.25	303281-10
BSO01S-028	.011	0.28	303281-11
BSO01S-030	.012	0.30	303281-12
BSO01S-033	.013	0.33	303281-13
BSO01S-035	.014	0.35	303281-14
BSO01S-038	.015	0.38	303281-15
BSO01S-041	.016	0.41	303281-16
BSO01S-046	.018	0.46	303281-18
BSO01S-050	.020	0.50	303281-20

304352-xx sapphire orifice assembly comes with last chance filter & o-ring.

BSO02 BSO02D-xxx Diamond Orifice

Sketch

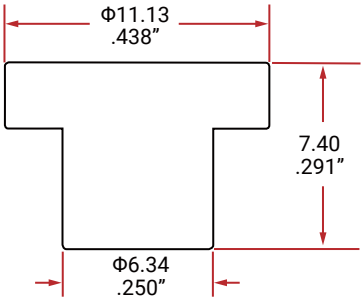

Note

Replace OMAX GlobalMAX

WHP PART #	ID inch	ID mm
BSO02D-010	.004	0.10
BSO02D-013	.005	0.13
BSO02D-015	.006	0.15
BSO02D-018	.007	0.18
BSO02D-020	.008	0.20
BSO02D-023	.009	0.23
BSO02D-025	.010	0.25
BSO02D-028	.011	0.28
BSO02D-030	.012	0.30
BSO02D-033	.013	0.33
BSO02D-035	.014	0.35
BSO02D-038	.015	0.38
BSO02D-041	.016	0.41
BSO02D-046	.018	0.46
BSO02D-050	.020	0.50

BSO02R-Hxxx Ruby Orifice

Picture

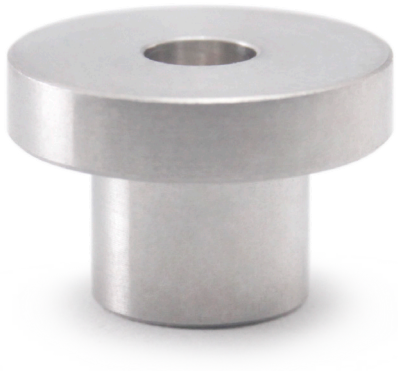

WHP PART #	ID inch	ID mm
BSO02R-010	.004	0.10
BSO02R-013	.005	0.13
BSO02R-015	.006	0.15
BSO02R-018	.007	0.18
BSO02R-020	.008	0.20
BSO02R-023	.009	0.23
BSO02R-025	.010	0.25
BSO02R-028	.011	0.28
BSO02R-030	.012	0.30
BSO02R-033	.013	0.33
BSO02R-035	.014	0.35
BSO02R-038	.015	0.38
BSO02R-041	.016	0.41
BSO02R-046	.018	0.46
BSO02R-050	.020	0.50

BSO02S-xxx Sapphire Orifice

WHP PART #	ID inch	ID mm	OMAX PART #
BSO02S-010	.004	0.10	316605-04
BSO02S-013	.005	0.13	316605-05
BSO02S-015	.006	0.15	316605-06
BSO02S-018	.007	0.18	316605-07
BSO02S-020	.008	0.20	316605-08
BSO02S-023	.009	0.23	316605-09
BSO02S-025	.010	0.25	316605-10
BSO02S-028	.011	0.28	316605-11
BSO02S-030	.012	0.30	316605-12
BSO02S-033	.013	0.33	316605-13
BSO02S-035	.014	0.35	316605-14
BSO02S-038	.015	0.38	316605-15
BSO02S-041	.016	0.41	316605-16
BSO02S-046	.018	0.46	316605-18
BSO02S-050	.020	0.50	316605-20

WHP Waterjet Orifices

Diamond, Ruby & Sapphire

BSA01 BSA01D-xxx Diamond Orifice

Sketch

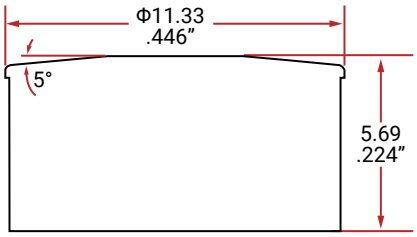

Note

Replace Accustream Dialine
Compatible with Dardi New 4-Axis

WHP PART #	ID inch	ID mm	Accustream PART #
BSA01D-010	.004	0.10	1-12749-004
BSA01D-013	.005	0.13	1-12749-005
BSA01D-015	.006	0.15	1-12749-006
BSA01D-018	.007	0.18	1-12749-007
BSA01D-020	.008	0.20	1-12749-008
BSA01D-023	.009	0.23	1-12749-009
BSA01D-025	.010	0.25	1-12749-010
BSA01D-028	.011	0.28	1-12749-011
BSA01D-030	.012	0.30	1-12749-012
BSA01D-033	.013	0.33	1-12749-013
BSA01D-035	.014	0.35	1-12749-014
BSA01D-038	.015	0.38	1-12749-015
BSA01D-041	.016	0.41	1-12749-016
BSA01D-046	.018	0.46	1-12749-018
BSA01D-050	.020	0.50	1-12749-020

BSA01R-Hxxx Ruby Orifice

Picture

WHP PART #	ID inch	ID mm	Accustream PART #
BSA01R-H010	.004	0.10	1-12835-004
BSA01R-H013	.005	0.13	1-12835-005
BSA01R-H015	.006	0.15	1-12835-006
BSA01R-H018	.007	0.18	1-12835-007
BSA01R-H020	.008	0.20	1-12835-008
BSA01R-H023	.009	0.23	1-12835-009
BSA01R-H025	.010	0.25	1-12835-010
BSA01R-H028	.011	0.28	1-12835-011
BSA01R-H030	.012	0.30	1-12835-012
BSA01R-H033	.013	0.33	1-12835-013
BSA01R-H035	.014	0.35	1-12835-014
BSA01R-H038	.015	0.38	1-12835-015
BSA01R-H041	.016	0.41	1-12835-016
BSA01R-H046	.018	0.46	1-12835-018
BSA01R-H050	.020	0.50	1-12835-020

BSA01S-xxx Sapphire Orifice

WHP PART #	ID inch	ID mm	Accustream PART #
BSA01S-010	.004	0.10	1-22835-004
BSA01S-013	.005	0.13	1-22835-005
BSA01S-015	.006	0.15	1-22835-006
BSA01S-018	.007	0.18	1-22835-007
BSA01S-020	.008	0.20	1-22835-008
BSA01S-023	.009	0.23	1-22835-009
BSA01S-025	.010	0.25	1-22835-010
BSA01S-028	.011	0.28	1-22835-011
BSA01S-030	.012	0.30	1-22835-012
BSA01S-033	.013	0.33	1-22835-013
BSA01S-035	.014	0.35	1-22835-014
BSA01S-038	.015	0.38	1-22835-015
BSA01S-041	.016	0.41	1-22835-016
BSA01S-046	.018	0.46	1-22835-018
BSA01S-050	.020	0.50	1-22835-020

BSD01 BSD01D-xxx Diamond Orifice

Sketch

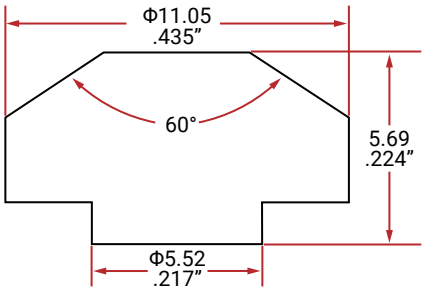

Note

Replace Dardi Old 4-Axis
Compatible with Accustream A2

WHP PART #	ID inch	ID mm	Accustream PART #	Dardi PART #
BSD01D-010	.004	0.10	1-11007D-004	--
BSD01D-013	.005	0.13	1-11007D-005	--
BSD01D-015	.006	0.15	1-11007D-006	--
BSD01D-018	.007	0.18	1-11007D-007	--
BSD01D-020	.008	0.20	1-11007D-008	--
BSD01D-023	.009	0.23	1-11007D-009	--
BSD01D-025	.010	0.25	1-11007D-010	--
BSD01D-028	.011	0.28	1-11007D-011	--
BSD01D-030	.012	0.30	1-11007D-012	--
BSD01D-033	.013	0.33	1-11007D-013	520005472
BSD01D-035	.014	0.35	1-11007D-014	--
BSD01D-038	.015	0.38	1-11007D-015	--
BSD01D-041	.016	0.41	1-11007D-016	--
BSD01D-046	.018	0.46	1-11007D-018	--
BSD01D-050	.020	0.50	1-11007D-020	--

BSF01R-Hxxx Ruby Orifice

Picture

WHP PART #	ID inch	ID mm	Accustream PART #	Dardi PART #
BSD01R-H010	.004	0.10	1-11007-004	--
BSD01R-H013	.005	0.13	1-11007-005	--
BSD01R-H015	.006	0.15	1-11007-006	--
BSD01R-H018	.007	0.18	1-11007-007	--
BSD01R-H020	.008	0.20	1-11007-008	--
BSD01R-H023	.009	0.23	1-11007-009	--
BSD01R-H025	.010	0.25	1-11007-010	--
BSD01R-H028	.011	0.28	1-11007-011	--
BSD01R-H030	.012	0.30	1-11007-012	--
BSD01R-H033	.013	0.33	1-11007-013	520005472
BSD01R-H035	.014	0.35	1-11007-014	--
BSD01R-H038	.015	0.38	1-11007-015	--
BSD01R-H041	.016	0.41	1-11007-016	--
BSD01R-H046	.018	0.46	1-11007-018	--
BSD01R-H050	.020	0.50	1-11007-020	--

BSF01S-xxx Sapphire Orifice

WHP PART #	ID inch	ID mm	Accustream PART #	Dardi PART #
BSD01S-010	.004	0.10	1-21007-004	--
BSD01S-013	.005	0.13	1-21007-005	--
BSD01S-015	.006	0.15	1-21007-006	--
BSD01S-018	.007	0.18	1-21007-007	--
BSD01S-020	.008	0.20	1-21007-008	--
BSD01S-023	.009	0.23	1-21007-009	--
BSD01S-025	.010	0.25	1-21007-010	--
BSD01S-028	.011	0.28	1-21007-011	--
BSD01S-030	.012	0.30	1-21007-012	--
BSD01S-033	.013	0.33	1-21007-013	520005472
BSD01S-035	.014	0.35	1-21007-014	--
BSD01S-038	.015	0.38	1-21007-015	--
BSD01S-041	.016	0.41	1-21007-016	--
BSD01S-046	.018	0.46	1-21007-018	--
BSD01S-050	.020	0.50	1-21007-020	--

WHP Waterjet Orifices

Diamond, Ruby & Sapphire

BSD02 BSD02D-xxx Diamond Orifice

Sketch

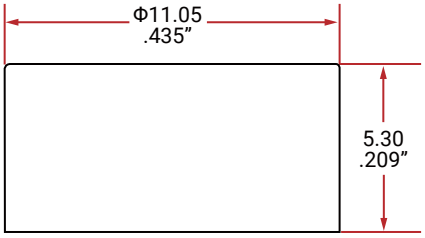

Note

Replace Dardi New 4-Axis
Compatible with Accustream Dialine

WHP PART #	ID inch	ID mm	Dardi PART #
BSD02D-010	.004	0.10	--
BSD02D-013	.005	0.13	--
BSD02D-015	.006	0.15	--
BSD02D-018	.007	0.18	--
BSD02D-020	.008	0.20	--
BSD02D-023	.009	0.23	--
BSD02D-025	.010	0.25	--
BSD02D-028	.011	0.28	--
BSD02D-030	.012	0.30	520005733
BSD02D-033	.013	0.33	520005732
BSD02D-035	.014	0.35	--
BSD02D-038	.015	0.38	--
BSD02D-041	.016	0.41	--
BSD02D-046	.018	0.46	--
BSD02D-050	.020	0.50	--

BSD02R-Hxxx Ruby Orifice

Picture

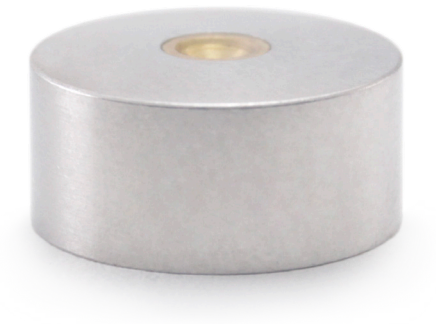

WHP PART #	ID inch	ID mm	Dardi PART #
BSD02R-H010	.004	0.10	--
BSD02R-H013	.005	0.13	--
BSD02R-H015	.006	0.15	--
BSD02R-H018	.007	0.18	--
BSD02R-H020	.008	0.20	--
BSD02R-H023	.009	0.23	--
BSD02R-H025	.010	0.25	--
BSD02R-H028	.011	0.28	--
BSD02R-H030	.012	0.30	520005733
BSD02R-H033	.013	0.33	520005732
BSD02R-H035	.014	0.35	--
BSD02R-H038	.015	0.38	--
BSD02R-H041	.016	0.41	--
BSD02R-H046	.018	0.46	--
BSD02R-H050	.020	0.50	--

BSD02S-xxx Sapphire Orifice

WHP PART #	ID inch	ID mm	Dardi PART #
BSD02S-010	.004	0.10	--
BSD02S-013	.005	0.13	--
BSD02S-015	.006	0.15	--
BSD02S-018	.007	0.18	--
BSD02S-020	.008	0.20	--
BSD02S-023	.009	0.23	--
BSD02S-025	.010	0.25	--
BSD02S-028	.011	0.28	--
BSD02S-030	.012	0.30	520005733
BSD02S-033	.013	0.33	520005732
BSD02S-035	.014	0.35	--
BSD02S-038	.015	0.38	--
BSD02S-041	.016	0.41	--
BSD02S-046	.018	0.46	--
BSD02S-050	.020	0.50	--

BSD03 BSD03D-xxx Diamond Orifice

Sketch

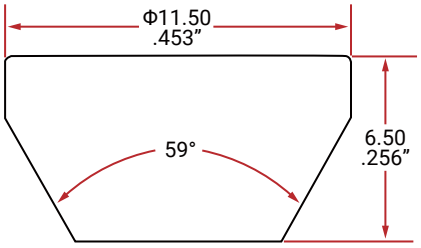

Note

Replace Dardi SP7

WHP PART #	ID inch	ID mm	Dardi PART #
BSD03D-010	.004	0.10	--
BSD03D-013	.005	0.13	--
BSD03D-015	.006	0.15	--
BSD03D-018	.007	0.18	--
BSD03D-020	.008	0.20	--
BSD03D-023	.009	0.23	--
BSD03D-025	.010	0.25	731010128; K0599053
BSD03D-028	.011	0.28	--
BSD03D-030	.012	0.30	731010075; K0599074
BSD03D-033	.013	0.33	--
BSD03D-035	.014	0.35	--
BSD03D-038	.015	0.38	--
BSD03D-041	.016	0.41	--
BSD03D-046	.018	0.46	--
BSD03D-050	.020	0.50	--

BSD03R-Hxxx Ruby Orifice

Picture

WHP PART #	ID inch	ID mm	Dardi PART #
BSD03R-H010	.004	0.10	--
BSD03R-H013	.005	0.13	--
BSD03R-H015	.006	0.15	--
BSD03R-H018	.007	0.18	--
BSD03R-H020	.008	0.20	--
BSD03R-H023	.009	0.23	--
BSD03R-H025	.010	0.25	731010128; K0599053
BSD03R-H028	.011	0.28	--
BSD03R-H030	.012	0.30	731010075; K0599074
BSD03R-H033	.013	0.33	--
BSD03R-H035	.014	0.35	--
BSD03R-H038	.015	0.38	--
BSD03R-H041	.016	0.41	--
BSD03R-H046	.018	0.46	--
BSD03R-H050	.020	0.50	--

BSD03S-xxx Sapphire Orifice

WHP PART #	ID inch	ID mm	Dardi PART #
BSD03S-010	.004	0.10	--
BSD03S-013	.005	0.13	--
BSD03S-015	.006	0.15	--
BSD03S-018	.007	0.18	--
BSD03S-020	.008	0.20	--
BSD03S-023	.009	0.23	--
BSD03S-025	.010	0.25	731010128; K0599053
BSD03S-028	.011	0.28	--
BSD03S-030	.012	0.30	731010075; K0599074
BSD03S-033	.013	0.33	--
BSD03S-035	.014	0.35	--
BSD03S-038	.015	0.38	--
BSD03S-041	.016	0.41	--
BSD03S-046	.018	0.46	--
BSD03S-050	.020	0.50	--

WHP Waterjet Orifices

Diamond, Ruby & Sapphire

BSD04 BSD04D-xxx Diamond Orifice

Sketch

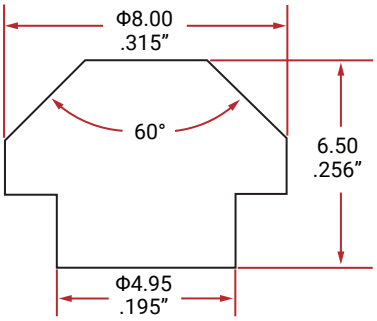

Note

Replace Dardi SP5

WHP PART #	ID inch	ID mm	Dardi PART #
BSD04D-010	.004	0.10	--
BSD04D-013	.005	0.13	--
BSD04D-015	.006	0.15	--
BSD04D-018	.007	0.18	--
BSD04D-020	.008	0.20	--
BSD04D-023	.009	0.23	--
BSD04D-025	.010	0.25	731010068; K0599051
BSD04D-028	.011	0.28	--
BSD04D-030	.012	0.30	731010070; K0599052
BSD04D-033	.013	0.33	--
BSD04D-035	.014	0.35	--
BSD04D-038	.015	0.38	--
BSD04D-041	.016	0.41	--
BSD04D-046	.018	0.46	--
BSD03D-050	.020	0.50	--

BSD04R-Hxxx Ruby Orifice

Picture

WHP PART #	ID inch	ID mm	Dardi PART #
BSD04R-H010	.004	0.10	--
BSD04R-H013	.005	0.13	--
BSD04R-H015	.006	0.15	--
BSD04R-H018	.007	0.18	--
BSD04R-H020	.008	0.20	--
BSD04R-H023	.009	0.23	--
BSD04R-H025	.010	0.25	731010068; K0599051
BSD04R-H028	.011	0.28	--
BSD04R-H030	.012	0.30	731010070; K0599052
BSD04R-H033	.013	0.33	--
BSD04R-H035	.014	0.35	--
BSD04R-H038	.015	0.38	--
BSD04R-H041	.016	0.41	--
BSD04R-H046	.018	0.46	--
BSD04R-H050	.020	0.50	--

BSD04S-xxx Sapphire Orifice

WHP PART #	ID inch	ID mm	Dardi PART #
BSD04S-010	.004	0.10	--
BSD04S-013	.005	0.13	--
BSD04S-015	.006	0.15	--
BSD04S-018	.007	0.18	--
BSD04S-020	.008	0.20	--
BSD04S-023	.009	0.23	--
BSD04S-025	.010	0.25	731010068; K0599051
BSD04S-028	.011	0.28	--
BSD04S-030	.012	0.30	731010070; K0599052
BSD04S-033	.013	0.33	--
BSD04S-035	.014	0.35	--
BSD04S-038	.015	0.38	--
BSD04S-041	.016	0.41	--
BSD04S-046	.018	0.46	--
BSD04S-050	.020	0.50	--

BSJ01 BSJ01D-xxx Diamond Orifice

Sketch

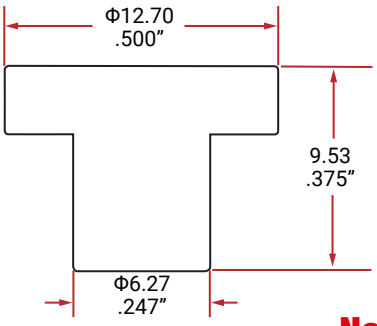

Note

Replace Jet Edge Permalign II
H2O Jet PL-II
Type 30

WHP PART #	ID inch	ID mm	Jet Edge PART #	H2O PART #
BSJ01D-010	.004	0.10	100158-004	201920-04
BSJ01D-013	.005	0.13	100158-005	201920-05
BSJ01D-015	.006	0.15	100158-006	201920-06
BSJ01D-018	.007	0.18	100158-007	201920-07
BSJ01D-020	.008	0.20	100158-008	201920-08
BSJ01D-023	.009	0.23	100158-009	201920-09
BSJ01D-025	.010	0.25	100158-010	201920-10
BSJ01D-028	.011	0.28	100158-011	201920-11
BSJ01D-030	.012	0.30	100158-012	201920-12
BSJ01D-033	.013	0.33	100158-013	201920-13
BSJ01D-035	.014	0.35	100158-014	201920-14
BSJ01D-038	.015	0.38	100158-015	201920-15
BSJ01D-041	.016	0.41	100158-016	201920-16
BSJ01D-046	.018	0.46	100158-018	201920-18
BSJ01D-050	.020	0.50	100158-020	201920-20

BSJ01R-Hxxx Ruby Orifice

Picture

WHP PART #	ID inch	ID mm	Jet Edge PART #	H2O PART #
BSJ01R-H010	.004	0.10	101526-004	203920-04
BSJ01R-H013	.005	0.13	101526-005	203920-05
BSJ01R-H015	.006	0.15	101526-006	203920-06
BSJ01R-H018	.007	0.18	101526-007	203920-07
BSJ01R-H020	.008	0.20	101526-008	203920-08
BSJ01R-H023	.009	0.23	101526-009	203920-09
BSJ01R-H025	.010	0.25	101526-010	203920-10
BSJ01R-H028	.011	0.28	101526-011	203920-11
BSJ01R-H030	.012	0.30	101526-012	203920-12
BSJ01R-H033	.013	0.33	101526-013	203920-13
BSJ01R-H035	.014	0.35	101526-014	203920-14
BSJ01R-H038	.015	0.38	101526-015	203920-15
BSJ01R-H041	.016	0.41	101526-016	203920-16
BSJ01R-H046	.018	0.46	101526-018	203920-18
BSJ01R-H050	.020	0.50	101526-020	203920-20

BSJ01S-xxx Sapphire Orifice

WHP PART #	ID inch	ID mm	Jet Edge PART #
BSJ01S-010	.004	0.10	100159-004
BSJ01S-013	.005	0.13	100159-005
BSJ01S-015	.006	0.15	100159-006
BSJ01S-018	.007	0.18	100159-007
BSJ01S-020	.008	0.20	100159-008
BSJ01S-023	.009	0.23	100159-009
BSJ01S-025	.010	0.25	100159-010
BSJ01S-028	.011	0.28	100159-011
BSJ01S-030	.012	0.30	100159-012
BSJ01S-033	.013	0.33	100159-013
BSJ01S-035	.014	0.35	100159-014
BSJ01S-038	.015	0.38	100159-015
BSJ01S-041	.016	0.41	100159-016
BSJ01S-046	.018	0.46	100159-018
BSJ01S-050	.020	0.50	100159-020

WHP Waterjet Orifices

Diamond, Ruby & Sapphire

BSY01 BSY01D-xxx Diamond Orifice

Sketch

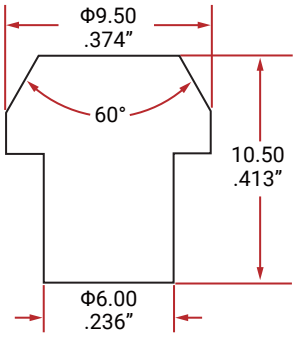

Note

Replace Same Orifices
Old Style

WHP PART #	ID inch	ID mm
BSY01D-010	.004	0.10
BSY01D-013	.005	0.13
BSY01D-015	.006	0.15
BSY01D-018	.007	0.18
BSY01D-020	.008	0.20
BSY01D-023	.009	0.23
BSY01D-025	.010	0.25
BSY01D-028	.011	0.28
BSY01D-030	.012	0.30
BSY01D-033	.013	0.33
BSY01D-035	.014	0.35
BSY01D-038	.015	0.38
BSY01D-041	.016	0.41
BSY01D-046	.018	0.46
BSY01D-050	.020	0.50

BSY01R-Hxxx Ruby Orifice

Picture

WHP PART #	ID inch	ID mm
BSY01R-H010	.004	0.10
BSY01R-H013	.005	0.13
BSY01R-H015	.006	0.15
BSY01R-H018	.007	0.18
BSY01R-H020	.008	0.20
BSY01R-H023	.009	0.23
BSY01R-H025	.010	0.25
BSY01R-H028	.011	0.28
BSY01R-H030	.012	0.30
BSY01R-H033	.013	0.33
BSY01R-H035	.014	0.35
BSY01R-H038	.015	0.38
BSY01R-H041	.016	0.41
BSY01R-H046	.018	0.46
BSY01R-H050	.020	0.50

BSY01S-xxx Sapphire Orifice

WHP PART #	ID inch	ID mm
BSY01S-010	.004	0.10
BSY01S-013	.005	0.13
BSY01S-015	.006	0.15
BSY01S-018	.007	0.18
BSY01S-020	.008	0.20
BSY01S-023	.009	0.23
BSY01S-025	.010	0.25
BSY01S-028	.011	0.28
BSY01S-030	.012	0.30
BSY01S-033	.013	0.33
BSY01S-035	.014	0.35
BSY01S-038	.015	0.38
BSY01S-041	.016	0.41
BSY01S-046	.018	0.46
BSY01S-050	.020	0.50

BSY02 BSY02D-xxx Diamond Orifice

Sketch

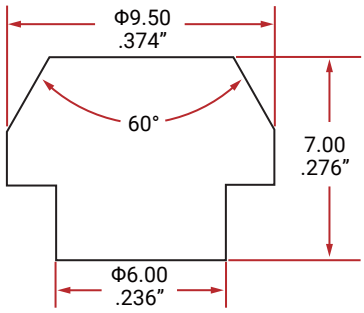

Note

Replace Same Orifices
New Style

WHP PART #	ID inch	ID mm
BSY02D-010	.004	0.10
BSY02D-013	.005	0.13
BSY02D-015	.006	0.15
BSY02D-018	.007	0.18
BSY02D-020	.008	0.20
BSY02D-023	.009	0.23
BSY02D-025	.010	0.25
BSY02D-028	.011	0.28
BSY02D-030	.012	0.30
BSY02D-033	.013	0.33
BSY02D-035	.014	0.35
BSY02D-038	.015	0.38
BSY02D-041	.016	0.41
BSY02D-046	.018	0.46
BSY02D-050	.020	0.50

BSY02R-Hxxx Ruby Orifice

Picture

WHP PART #	ID inch	ID mm
BSY02R-H010	.004	0.10
BSY02R-H013	.005	0.13
BSY02R-H015	.006	0.15
BSY02R-H018	.007	0.18
BSY02R-H020	.008	0.20
BSY02R-H023	.009	0.23
BSY02R-H025	.010	0.25
BSY02R-H028	.011	0.28
BSY02R-H030	.012	0.30
BSY02R-H033	.013	0.33
BSY02R-H035	.014	0.35
BSY02R-H038	.015	0.38
BSY02R-H041	.016	0.41
BSY02R-H046	.018	0.46
BSY02R-H050	.020	0.50

BSY02S-xxx Sapphire Orifice

WHP PART #	ID inch	ID mm
BSY02S-010	.004	0.10
BSY02S-013	.005	0.13
BSY02S-015	.006	0.15
BSY02S-018	.007	0.18
BSY02S-020	.008	0.20
BSY02S-023	.009	0.23
BSY02S-025	.010	0.25
BSY02S-028	.011	0.28
BSY02S-030	.012	0.30
BSY02S-033	.013	0.33
BSY02S-035	.014	0.35
BSY02S-038	.015	0.38
BSY02S-041	.016	0.41
BSY02S-046	.018	0.46
BSY02S-050	.020	0.50

Diamond Cutting Head

We Make Better As Standard

All you need to know about Diamond Guard Filter

Why You should use Short Stop Filter?

Within the internal components of every waterjet system, errant particles become dislodged and travel through the high pressure lines. These particles end up at the waterjet orifice, impacting and potentially damaging the orifice edge. When debris is larger than the hole in the orifice, the orifice assembly becomes plugged or partially blocked.

Generally, there are always some micro imperfections in the diamond material. These imperfections can lead to breakage as a result of impact forces when switching the process on and off.

How Short Stop Filter Works?

- WHP *Short Stop Filter will Protect orifices and on/off valves and boost productivity by catching and removing upstream debris (generated by normal wear and maintenance).
- WHP SSF is designed to simply and effectively capture debris larger than .0055" (0,14mm) from impacting or blocking the orifice. Any particles small enough to pass through the DG Filter will also exit safely through the hole of the waterjet orifice.

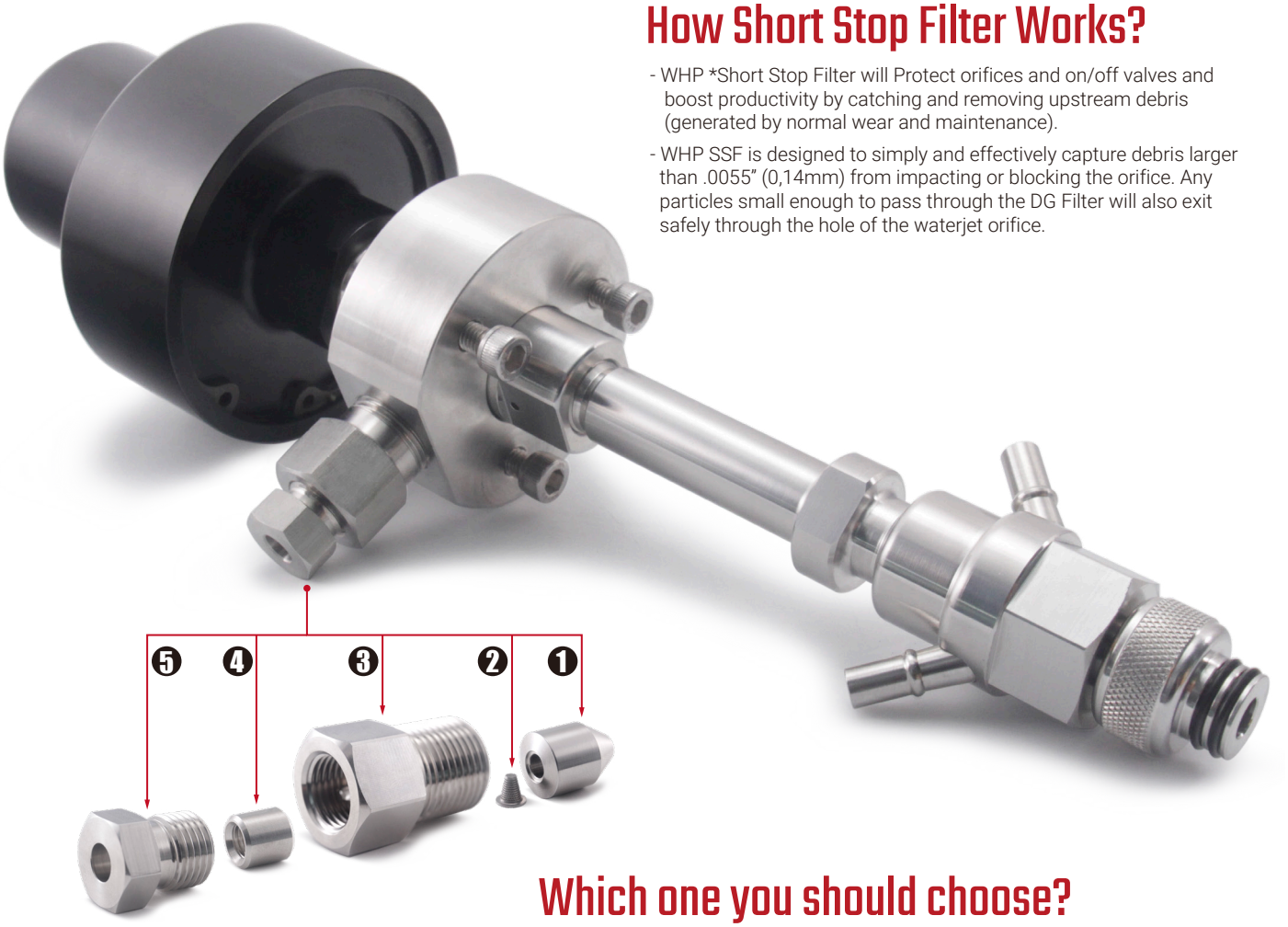

❶ Bullet Adapter

❷ Filter Element

❸ Adapter 3/8" M to 1/4" F*

❹ HP Collar 1/4"

❺ HP Gland 1/4"

Which one you should choose?

DTK162		❷	For waterjet operator who already use short stop filter.
DTK160	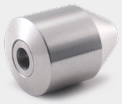	❶ ❷	For waterjet operator who already use short stop filter.
DTK160Z		❶ ❷ ❸ ❹ ❺	For waterjet operator who have never used a SSF before.

(*1/4"M to 1/4"F, 3/8"M to 3/8"F & M16M to M16M SSF body are also avaliable)

Short Stop Filter is also known as: SSF, Diamond Guard Filter, Thimble Filter, Last Chance Filter, Witch Hat Filter

DTO100-A 1000+ Hours Diamond Cutting Heads

Nozzle Assembly

WHP PART #	Reference Code	Specifications
DTO100-A030	305617-12	.012”/0.30mm Diamond Orifice
DTO100-A033	305617-13	.013”/0.33mm Diamond Orifice
DTO100-A035	305617-14	.014”/0.35mm Diamond Orifice
DTO100-A038	305617-15	.015”/0.38mm Diamond Orifice
DTO100-A041	305617-16	.016”/0.41mm Diamond Orifice
DTO100-A050	305617-20	.020”/0.50mm Diamond Orifice

(Filter with O-Ring)

Other size available upon request.

Nozzle Assembly w/5pcs Filters

WHP PART #	Reference Code	Specifications
DTO100-AL030	307448-12	.012”/0.30mm Diamond Orifice, w/ filter*5
DTO100-AL033	307448-13	.013”/0.33mm Diamond Orifice, w/ filter*5
DTO100-AL035	307448-14	.014”/0.35mm Diamond Orifice, w/ filter*5
DTO100-AL038	307448-15	.015”/0.38mm Diamond Orifice, w/ filter*5
DTO100-AL041	307448-16	.016”/0.41mm Diamond Orifice, w/ filter*5
DTO100-AL050	307448-20	.020”/0.50mm Diamond Orifice, w/ filter*5

DTK100-A 1000+ Hours Diamond Cutting Heads

(New Style)

Diamond Cutting Head

WHP PART #	Reference Code	Specifications
DTK100-A018	20477959007	.007”/0.18mm Diamond Orifice
DTK100-A025	20477959010	.010”/0.25mm Diamond Orifice
DTK100-A030	20477959012	.012”/0.30mm Diamond Orifice
DTK100-A033	20477959013	.013”/0.33mm Diamond Orifice
DTK100-A035	20477959014	.014”/0.35mm Diamond Orifice
DTK100-A038	20477959015	.015”/0.38mm Diamond Orifice

Other size available upon request.

Diamond Cutting Head w/short stop filter

WHP PART #	Reference Code	Specifications
DTK100-AL018	20477950007	.007”/0.18mm Diamond Orifice, w/ SSF*1
DTK100-AL025	20477950010	.010”/0.25mm Diamond Orifice, w/ SSF*1
DTK100-AL030	20477950012	.012”/0.30mm Diamond Orifice, w/ SSF*1
DTK100-AL033	20477950013	.013”/0.33mm Diamond Orifice, w/ SSF*1
DTK100-AL035	20477950014	.014”/0.35mm Diamond Orifice, w/ SSF*1
DTK100-AL038	20477950015	.015”/0.38mm Diamond Orifice, w/ SSF*1

(Old Style)

Diamond Cutting Heads

Replace IDE III

DTK100-C 1000+ Hours Diamond Cutting Heads

(Single Inlet)

Other size available upon request.

Diamond Cutting Head

WHP PART #	Reference Code	Specifications
DTK100-C018	301329-1-07	.007"/0.18mm Diamond Orifice
DTK100-C025	301329-1-10	.010"/0.25mm Diamond Orifice
DTK100-C030	301329-1-12	.012"/0.30mm Diamond Orifice
DTK100-C033	301329-1-13	.013"/0.33mm Diamond Orifice
DTK100-C035	301329-1-14	.014"/0.35mm Diamond Orifice
DTK100-C038	301329-1-15	.015"/0.38mm Diamond Orifice

Diamond Cutting Head w/short stop filter

WHP PART #	Reference Code	Specifications
DTK100-CL018	301329-1-07-SSF	.007"/0.18mm Diamond Orifice, w/ SSF*1
DTK100-CL025	301329-1-10-SSF	.010"/0.25mm Diamond Orifice, w/ SSF*1
DTK100-CL030	301329-1-12-SSF	.012"/0.30mm Diamond Orifice, w/ SSF*1
DTK100-CL033	301329-1-13-SSF	.013"/0.33mm Diamond Orifice, w/ SSF*1
DTK100-CL035	301329-1-14-SSF	.014"/0.35mm Diamond Orifice, w/ SSF*1
DTK100-CL038	301329-1-15-SSF	.015"/0.38mm Diamond Orifice, w/ SSF*1

DTK100-D 1000+ Hours Diamond Cutting Heads

(Dual Inlet)

Other size available upon request.

Diamond Cutting Head

WHP PART #	Reference Code	Specifications
DTK100-D018	301329-2-07	.007"/0.18mm Diamond Orifice
DTK100-D025	301329-2-10	.010"/0.25mm Diamond Orifice
DTK100-D030	301329-2-12	.012"/0.30mm Diamond Orifice
DTK100-D033	301329-2-13	.013"/0.33mm Diamond Orifice
DTK100-D035	301329-2-14	.014"/0.35mm Diamond Orifice
DTK100-D038	301329-2-15	.015"/0.38mm Diamond Orifice

Diamond Cutting Head w/short stop filter

WHP PART #	Reference Code	Specifications
DTK100-DL018	301329-2-07-SSF	.007"/0.18mm Diamond Orifice, w/ SSF*1
DTK100-DL025	301329-2-10-SSF	.010"/0.25mm Diamond Orifice, w/ SSF*1
DTK100-DL030	301329-2-12-SSF	.012"/0.30mm Diamond Orifice, w/ SSF*1
DTK100-DL033	301329-2-13-SSF	.013"/0.33mm Diamond Orifice, w/ SSF*1
DTK100-DL035	301329-2-14-SSF	.014"/0.35mm Diamond Orifice, w/ SSF*1
DTK100-DL038	301329-2-15-SSF	.015"/0.38mm Diamond Orifice, w/ SSF*1

DTK100-B 1000+ Hours Diamond Cutting Heads

(Right Hand)

(Left Hand)

Other size available upon request.

Diamond Cutting Head [Right Hand]

WHP PART #	Reference Code	Specifications
DTK100-B018	SLC2-R-07	.007”/0.18mm Diamond Orifice
DTK100-B025	SLC2-R-10	.010”/0.25mm Diamond Orifice
DTK100-B030	SLC2-R-12	.012”/0.30mm Diamond Orifice
DTK100-B033	SLC2-R-13	.013”/0.33mm Diamond Orifice
DTK100-B035	SLC2-R-14	.014”/0.35mm Diamond Orifice
DTK100-B038	SLC2-R-15	.015”/0.38mm Diamond Orifice

Diamond Cutting Head w/short stop filter

WHP PART #	Specifications
DTK100-BL018	.007”/0.18mm Diamond Orifice, w/ Short Stop Filter*1, Right
DTK100-BL025	.010”/0.25mm Diamond Orifice, w/ Short Stop Filter*1, Right
DTK100-BL030	.012”/0.30mm Diamond Orifice, w/ Short Stop Filter*1, Right
DTK100-BL033	.013”/0.33mm Diamond Orifice, w/ Short Stop Filter*1, Right
DTK100-BL035	.014”/0.35mm Diamond Orifice, w/ Short Stop Filter*1, Right
DTK100-BL038	.015”/0.38mm Diamond Orifice, w/ Short Stop Filter*1, Right

Diamond Cutting Head [Left Hand]

WHP PART #	Reference Code	Specifications
DTK100-B018L	SLC2-L-07	.007”/0.18mm Diamond Orifice
DTK100-B025L	SLC2-L-10	.010”/0.25mm Diamond Orifice
DTK100-B030L	SLC2-L-12	.012”/0.30mm Diamond Orifice
DTK100-B033L	SLC2-L-13	.013”/0.33mm Diamond Orifice
DTK100-B035L	SLC2-L-14	.014”/0.35mm Diamond Orifice
DTK100-B038L	SLC2-L-15	.015”/0.38mm Diamond Orifice

Diamond Cutting Head w/short stop filter

WHP PART #	Specifications
DTK100-BL018L	.007”/0.18mm Diamond Orifice, w/ Short Stop Filter*1, Left
DTK100-BL025L	.010”/0.25mm Diamond Orifice, w/ Short Stop Filter*1, Left
DTK100-BL030L	.012”/0.30mm Diamond Orifice, w/ Short Stop Filter*1, Left
DTK100-BL033L	.013”/0.33mm Diamond Orifice, w/ Short Stop Filter*1, Left
DTK100-BL035L	.014”/0.35mm Diamond Orifice, w/ Short Stop Filter*1, Left
DTK100-BL038L	.015”/0.38mm Diamond Orifice, w/ Short Stop Filter*1, Left

Diamond Cutting Heads

Replace DiaLine

DTA100 **1000+ Hours** Cutting Heads Assembly

(Single Inlet)

(Dual Inlet)

Choose Cutting Head

WHP PART #	Reference Code	Specifications
DTA100-A	1-13904-2-1-1	For .281"/7.14mm OD Nozzle, Single-Inlet
DTA100-B	1-13904-3-1-1	For .281"/7.14mm OD Nozzle, Dual-Inlet
DTA100-C	1-13904-1-1-1	For .300"/7.62mm OD Nozzle, Single-Inlet
DTA100-D	--	For .300"/7.62mm OD Nozzle, Dual-Inlet

All these abrasive bodys are equipped with 3/8" abrasive inlet, please contact our sales for other inlet size.

Choose An Orifice

Diamond #	ID inch	ID mm	Reference Code
BSA01D-010	.004	0.10	1-12749-004
BSA01D-013	.005	0.13	1-12749-005
BSA01D-015	.006	0.15	1-12749-006
BSA01D-018	.007	0.18	1-12749-007
BSA01D-020	.008	0.20	1-12749-008
BSA01D-023	.009	0.23	1-12749-009
BSA01D-025	.010	0.25	1-12749-010
BSA01D-028	.011	0.28	1-12749-011
BSA01D-030	.012	0.30	1-12749-012
BSA01D-033	.013	0.33	1-12749-013
BSA01D-035	.014	0.35	1-12749-014
BSA01D-038	.015	0.38	1-12749-015
BSA01D-041	.016	0.41	1-12749-016
BSA01D-046	.018	0.46	1-12749-018
BSA01D-050	.020	0.50	1-12749-020

® 2021
Shanghai Miaoke Precision Machinery Co.,Ltd

Tel.: +86-21-60829798
Fax.: +86-21-69131035
Web.: www.shmiaoke.com

Keep Simple,
Keep Competitive.

Miaoke
淼科精密机械

Shanghai Miaoke Precision Machinery Co.,Ltd
Add.: No.1399 Middle Jiasong Road, Shanghai 201700 China
Tel.: +86-21-60829798 Fax.: +86-21-69131035
Webstie: www.shmiaoke.com